ALL PROPRIETARY RIGHTS RESERVED BY TOOLING 2000. THIS DRAWING SHALL NOT BE REPRODUCED OR IN ANY WAY UTILIZED FOR THE MANUFACTURE OF THE COMPONENT OR UNIT HEREIN DRAWN & MUST NOT BE RELEASED TO OTHER PARTIES WITHOUT WRITTEN CONSENT. INFRINGEMENT WILL BE LEGALLY PURSUED.

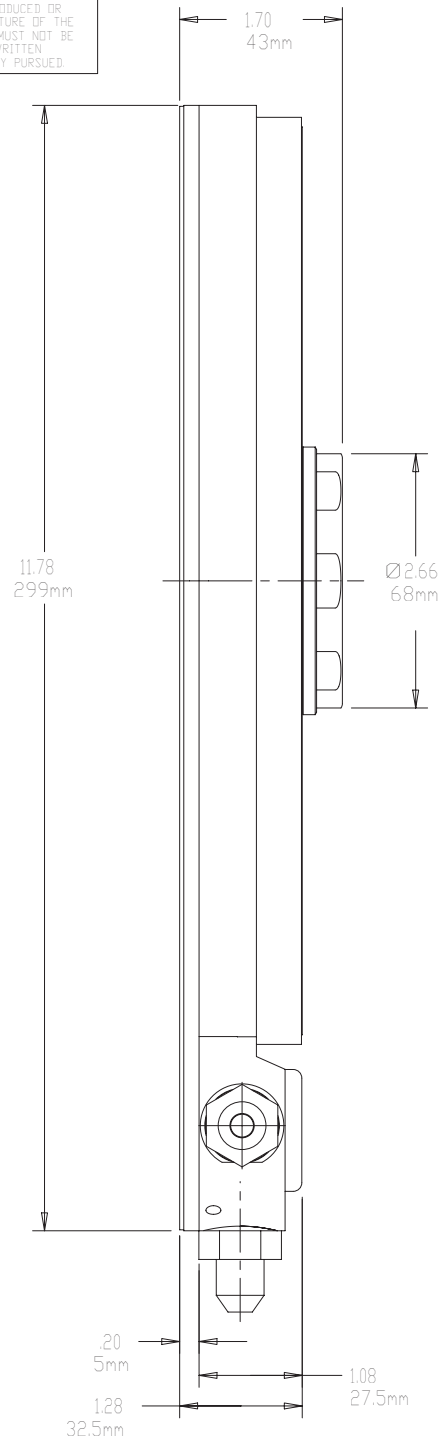

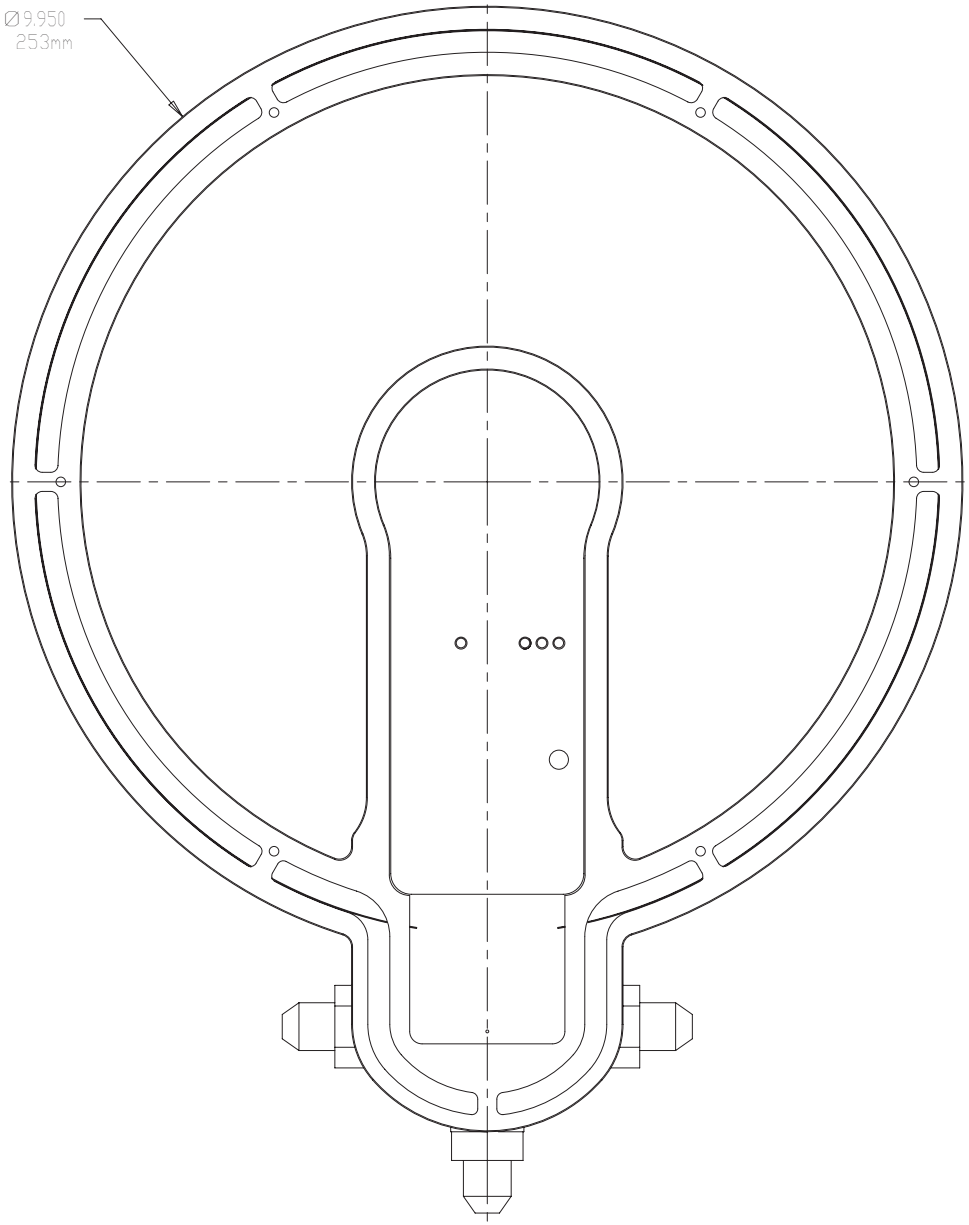

SCALE 1.000

REV	DESCRIPTION	DATE	INT
A	PROTO-TYPE	04.30.03	CWS

DO NOT SCALE DRAWING

MATERIAL	ASSY	DRAWN	VP 220B
FINISH	NONE	CHECKED	CWS
TOLERANCES	XX ±.01	ENGINEER	WB
	XXX ±.003	MFG	WB
	ANGLE ±1°	QA	--
		APPROVED	DON

TOOLING 2000

220B INSTALLATION

PRO-E:/MODELS/TOK/VP/220B

C 220B A